Aluminum Bolt On Handrail 8 Ft. For Aluminum Walk Ramps Retro Fit Silver

MODEL AWR-HR-8-RF

Loading Dock Equipment / Aluminum Walk Ramps

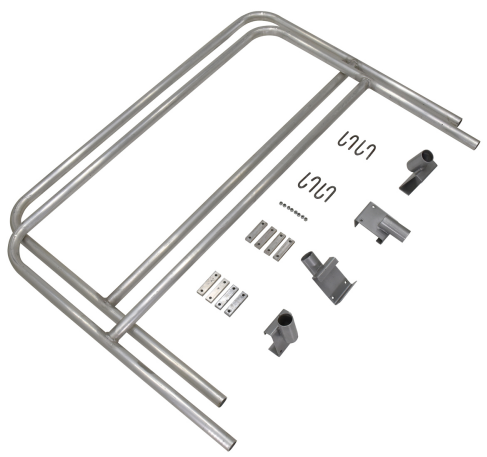

PRODUCT OVERVIEW

This Aluminum Walk Ramp Handrail gives ramp users more stability and security. Handrail can be bolted onto both A-style and B-style aluminum walk ramps. Handrail may be attached to one side or both sides of ramp. Installation brackets and hardware included.

KEY FEATURES

- Gives ramp users more stability and security
- Bolt onto both A-style and B-style aluminum walk ramps
- May be attached to one side or both sides of ramp
- Installation brackets and hardware included

CORE PRODUCT DATA

ASSEMBLED WEIGHT	ASSEMBLED SIZE	SHIP WEIGHT
41 lbs	4.5625" W x 74.3125" L x 45.3125" H	30 lbs

PACKAGE 1 SIZE	COLOR / FINISH	FREIGHT TYPE
72" W x 42" D x 6" H	Silver	LTL Palletized

AVAILABILITY Available **QUICKSHIP: --**

Products are sold through Vestil distributor partners. Contact a distributor for current pricing and ordering.

PRODUCT SPECIFICATIONS

Usable Rail Length (in.)	72
Midrail (in.)	18-7/16
Railing Height (in.)	40-1/4
Installation	Bolt-on
Handrail (qty.)	2

PRODUCT & SHIPPING REFERENCE

Shipping Point: **Angola, IN 46703**

Warranty: **90 Days**

AVAILABLE PRODUCT RESOURCES

SCAN FOR CURRENT PRODUCT DATA

Live product page: https://www.vestil.com/product.php?FID=41